ENGINEERING APPROVAL

RE-INSPECT PER D4010 REV.D 10.06.03

Work Order ID 58337

May 3, 2010 2:33:00 PM

Item ID: D4010-1

Revision ID:

Item Name: Bearpaw

Start Date: 5/03/10 **Start Qty:** 8.00

Required Date: 5/07/10 **Req'd Qty:** 8.00

Reference:

Accept

Setup Start

Stop

Cust Item ID:

Customer:

Run Start

Stop

Approvals: **Process Plan:** **Date:** **Tooling:** **Date:**

QC: **Date:** **SPC (Y/N):** **Date:**

Sequence ID/ Work Center ID	Operation Description	Set Up/ Run Hours	Draw Number	Draw Rev.	Plan Code	Accept Qty	Reject Qty	Reject Number	Insp. Stamp
Draw Nbr D4010	**Revision Nbr** C / Rev 0								
100	HAND FINISHING THERMOFORMING	0.00							
Thermoform	**Memo**	0.00							
Thermoforming Machine	Cut Blanks to fit frame size								
105	Dry Material	0.00							
HandThermo	**Memo**	0.00							
Hand Finishing Thermoforming	Dry Sheet as per QSI022 ALEXTRA								

BB 10/05/06 X8

Temp: 240°F

Time IN: 8:00PM 10/05/8

Time OUT: 7:00 AM 10/05/10

BB 10/05/10

Dart Aerospace Ltd

W/O:		WORK ORDER CHANGES					
DATE	STEP	PROCEDURE CHANGE	By	Date	Qty	Approval Chief Eng / Prod Mgr	Approval QC Inspector

Part No: _____ **PAR #:** _____ **Fault Category:** _____ **NCR:** Yes No **DQA:** _____ **Date:** _____

Resolution: _____ **Disposition:** _____ **QA: N/C Closed:** _____ **Date:** _____

NCR:		WORK ORDER NON-CONFORMANCE (NCR)						
DATE	STEP	Description of NC Section A	Corrective Action Section B			Verification Section C	Approval Chief Eng	Approval QC Inspector
			Initial Chief Eng	Action Description Chief Eng	Sign & Date			

NOTE: Date & initial all entries

H:\fFORMS\Quality Assurance\approved QA\NCRWO RevE

Work Order ID 58337

May 3, 2010 2:33:00 PM

Item ID: D4010-1 **Accept** **Setup Start**

Revision ID: **Stop**

Item Name: Bearpaw

Start Date: 5/03/10 **Start Qty:** 8.00 **Cust Item ID:**

Required Date: 5/07/10 **Req'd Qty:** 8.00 **Customer:**

Reference:

Run Start

Approvals: **Process Plan:** **Date:** **Tooling:** **Date:**

Stop

QC: **Date:** **SPC (Y/N):** **Date:**

Sequence ID/ Work Center ID	Operation Description	Set Up/ Run Hours	Draw Number	Draw Rev.	Plan Code	Accept Qty	Reject Qty	Reject Number	Insp. Stamp
110	THERMOFORMING MACHINE	0.00							
Thermoform	**Memo**	0.00							
Thermoforming Machine	Thermoform as per Dwg. D4010-1 and Folio FTA067 using tool DT 9540 Dwg. Rev. C Folio Rev. B								BB 10/05/10 X8
120	QC2- Inspect parts off machine FAI/FAIB	0.00							
QC	**Memo**	0.00							
Quality Control	Visually inspect for proper formation of each part								BB 10/05/10 X8
130	QC8- Inspect parts - second check	0.00							
QC	**Memo**	0.00							
Quality Control									WL 10/05/10 X8

Dart Aerospace Ltd

W/O:		WORK ORDER CHANGES					
DATE	STEP	PROCEDURE CHANGE	By	Date	Qty	Approval Chief Eng / Prod Mgr	Approval QC Inspector

Part No: _____ PAR #: _____ Fault Category: _____ NCR: Yes No DQA: _____ Date: _____

Resolution: _____ Disposition: _____ QA: N/C Closed: _____ Date: _____

NCR:		WORK ORDER NON-CONFORMANCE (NCR)						
DATE	STEP	Description of NC Section A	Corrective Action Section B			Verification Section C	Approval Chief Eng	Approval QC Inspector
			Initial Chief Eng	Action Description Chief Eng	Sign & Date			

NOTE: Date & initial all entries

H:\fFORMS\Quality Assurance\approved QA\NCRWO RevE

Work Order ID 58337

May 3, 2010 2:33:01 PM

Item ID: D4010-1 **Accept** **Setup** **Start**

Revision ID: **Stop**

Item Name: Bearpaw

Start Date: 5/03/10 **Start Qty:** 8.00 **Cust Item ID:**

Required Date: 5/07/10 **Req'd Qty:** 8.00 **Customer:**

Reference:

Run **Start** **Stop**

Approvals: **Process Plan:** **Date:** **Tooling:** **Date:**

QC: **Date:** **SPC (Y/N):** **Date:**

Sequence ID/ Work Center ID	Operation Description	Set Up/ Run Hours	Draw Number	Draw Rev.	Plan Code	Accept Qty	Reject Qty	Reject Number	Insp. Stamp
140	HAND FINISHING THERMOFORMING	0.00							
Thermoform	**Memo**	0.00							
Thermoforming Machine	1-Trim & Drill to Finished Dimensions as per dwg D4010-1 2- Use wearplate jig DT9542 to transfer drill holes in bearpaw as per dwg and use 0.375" unibite to open holes to finish size. 3- Chamfer all holes on both sides using appropriate 0-flute countersink bit.								BB 10/05/11 X8
145	Anneal Material	0.00							
HandThermo	**Memo**	0.00							
Hand Finishing Thermoforming	Anneal trimmed & drilled product at 250 deg. F. for 75 minutes & allow to cool in oven. Time In: 3:30 PM 10/05/11 Oven Off: 4:45 10/05/11								BB 10/05/11 X8

Dart Aerospace Ltd

W/O:		WORK ORDER CHANGES					
DATE	STEP	PROCEDURE CHANGE	By	Date	Qty	Approval Chief Eng / Prod Mgr	Approval QC Inspector

Part No: _____ **PAR #:** _____ **Fault Category:** _____ **NCR:** Yes No **DQA:** _____ **Date:** _____

Resolution: _____ **Disposition:** _____ **QA: N/C Closed:** _____ **Date:** _____

NCR:		WORK ORDER NON-CONFORMANCE (NCR)						
DATE	STEP	Description of NC Section A	Corrective Action Section B			Verification Section C	Approval Chief Eng	Approval QC Inspector
			Initial Chief Eng	Action Description Chief Eng	Sign & Date			

NOTE: Date & initial all entries

H:\fFORMS\Quality Assurance\approved QA\NCRWO RevE

Work Order ID 58337

May 3, 2010 2:33:01 PM

Item ID: D4010-1
Revision ID:
Item Name: Bearpaw

Accept

Setup Start
Stop

Start Date: 5/03/10 **Start Qty:** 8.00
Required Date: 5/07/10 **Req'd Qty:** 8.00
Reference:

Cust Item ID:
Customer:

Run Start
Stop

Approvals: **Process Plan:** **Date:** **Tooling:** **Date:**
QC: **Date:** **SPC (Y/N):** **Date:**

Sequence ID/ Work Center ID	Operation Description	Set Up/ Run Hours	Draw Number	Draw Rev.	Plan Code	Accept Qty	Reject Qty	Reject Number	Insp. Stamp
150	QC2- Inspect parts off machine FAI/FAIB	0.00							
QC	**Memo**	0.00							
Quality Control	Check dimensions to ensure conformity to drawing tolerances.								
160	QC5- Inspect part completeness to step on W/O	0.00							
QC	**Memo**	0.00							
Quality Control	was all inspections to Rev D Dwg								
170	Identify as per dwg & Stock Location: 57919	0.00							
Packaging	**Memo**	0.00							
Packaging									

Pb →
10/05/11
(x8)

ENGINEERING APPROVAL
R-8 - INSPECT PER D4010 REV. D. 10.06.03

10/06/04
(x8)

Dart Aerospace Ltd

W/O: 58337		WORK ORDER CHANGES					
DATE	STEP	PROCEDURE CHANGE Perm. Change	By	Date	Qty	Approval Chief Eng / Prod Mgr	Approval QC Inspector
10/05/12	#	move step # 100 (QC2) to after step # 140. makes no sense to have it after step # 145	[illegible]	10.06.07			10/05/12
		WO Date Dwg Rev to Rev D					10/05/12

Part No: DH010-1 PAR #: _____ Fault Category: _____ NCR: Yes No DQA: _____ Date: _____

Resolution: _____ Disposition: _____ QA: N/C Closed: _____ Date: _____

NCR:		WORK ORDER NON-CONFORMANCE (NCR)						
DATE	STEP	Description of NC Section A	Corrective Action Section B			Verification Section C	Approval Chief Eng	Approval QC Inspector
			Initial Chief Eng	Action Description Chief Eng	Sign & Date			

NOTE: Date & initial all entries

H:\fFORMS\Quality Assurance\approved QA\NCRWO RevE

Work Order ID 58337

May 3, 2010 2:33:01 PM

Item ID: D4010-1
Revision ID:
Item Name: Bearpaw

Accept

Setup **Start**
Stop

Start Date: 5/03/10 **Start Qty:** 8.00
Required Date: 5/07/10 **Req'd Qty:** 8.00
Reference:

Cust Item ID:
Customer:

Run **Start**
Stop

Approvals: **Process Plan:** **Date:** **Tooling:** **Date:**
QC: **Date:** **SPC (Y/N):** **Date:**

Sequence ID/ Work Center ID	Operation Description	Set Up/ Run Hours	Draw Number	Draw Rev.	Plan Code	Accept Qty	Reject Qty	Reject Number	Insp. Stamp
180	QC21- Final Inspection - Work Order Release	0.00							
QC Quality Control	**Memo**	0.00							

10/06/07
MR
10-6-4

Dart Aerospace Ltd

W/O:		WORK ORDER CHANGES					
DATE	STEP	PROCEDURE CHANGE	By	Date	Qty	Approval Chief Eng / Prod Mgr	Approval QC Inspector

Part No: _____ PAR #: _____ Fault Category: _____ NCR: Yes No DQA: _____ Date: _____

Resolution: _____ Disposition: _____ QA: N/C Closed: _____ Date: _____

NCR:		WORK ORDER NON-CONFORMANCE (NCR)						
DATE	STEP	Description of NC Section A	Corrective Action Section B			Verification Section C	Approval Chief Eng	Approval QC Inspector
			Initial Chief Eng	Action Description Chief Eng	Sign & Date			

NOTE: Date & initial all entries

H:\fFORMS\Quality Assurance\approved QA\NCRWO RevE

Picklist Print

May 3, 2010 2:32:58 PM

T

Work Order ID: 58337

Parent Item: D4010-1

Parent Item Name: Bearpaw

Start Date: 5/03/10 **Required Date:** 5/07/10

Comments: IPP RevA: New issue DD verified by:EC
IPP Rev B. Improved process Add Step 105 (Drying) & 145 (Annealling) to routings 10/03/31 DL

Start Qty: 8.00 **Required Qty:** 8.00

Component Item ID/	Replacement	Mfg/	Bin	Primary	Last	Route	Unit of	Qty on	Qty per Kit	Qty	Date	Status
M-ALXTRAB-S.300		Purchased	No			100	sf	488.9800	7.104			
Alextra ET 0 .300 sheet												

Location	Loc Qty	Loc Code
therm	488.98	
113108	488.98	

8

BB
10/05/06

Dart Aerospace Ltd

W/O:		WORK ORDER CHANGES					
DATE	STEP	PROCEDURE CHANGE	By	Date	Qty	Approval Chief Eng / Prod Mgr	Approval QC Inspector

Part No: _____ PAR #: _____ Fault Category: _____ NCR: Yes No DQA: _____ Date: _____

Resolution: _____ Disposition: _____ QA: N/C Closed: _____ Date: _____

NCR:		WORK ORDER NON-CONFORMANCE (NCR)						
DATE	STEP	Description of NC Section A	Corrective Action Section B			Verification Section C	Approval Chief Eng	Approval QC Inspector
			Initial Chief Eng	Action Description Chief Eng	Sign & Date			

NOTE: Date & initial all entries

H:\fFORMS\Quality Assurance\approved QA\NCRWO RevE

DART AEROSPACE LTD	Work Order:	58337
Description: BEARPAW	Part Number:	
Inspection Dwg: D4010 Rev: C		Page 1 of 1

FIRST ARTICLE INSPECTION CHECKLIST

THERMOFORMING SECTION

Description	Accept	Reject	Method of Inspection	Comments
Inside Radii less than N/A "	✓			
Shape Definition	✓			
Texture Retention	✓			
Material imperfections such as bumps, cracks, voids, scratching	✓			

Measured by:	WL	Date:	10/05/10

TRIMMING SECTION

Drawing Dimension	Tolerance	Actual Dimension	Accept	Reject	Method of Inspection	Comments
12.00"	+/- 0.25"	11.875"	✓			
5.50"	+/- .030"	5.50"	✓			
9.50"	+/- .030"	9.50"	✓			
11.81"	+/- .030"	11.81"	✓			
16.69"	+/- .030"	16.70"	✓			
20.94"	+/- .030"	20.90"	✓			
23.25"	+/- .030"	23.25	✓			
24.66"	+/- 0.25"	24.5	✓			
2.34"	+/- 0.25"	2.25	✓			
1.00"	+/- 0.100"	1.05"	✓			
Ø 1.25"	+/- 0.13"	1.35"	✓			
Ø 0.375"	+/- 0.006" 0.001"	0.375"	✓			

Measured by:	WL	Date:	10/05/11
Audited by:	JD	Date:	10/05/11
Preliminary Approval:		Date:	

Rev	Date	Change	Revised by	Approved
B	10.04.14	Added preliminary approval	KJ	

10-04-14

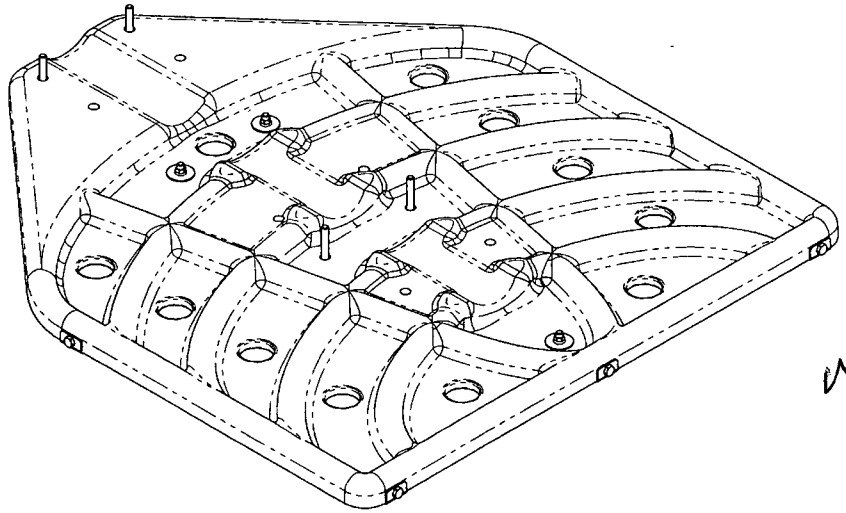

D4010-041 BEARPAW ASSEMBLY (407)

n/o
58337

RELEASED
2009 -11- 24

REV.	DESCRIPTION	BY	DATE
C	OPTIMIZED DESIGN BASED ON FUNCTIONALITY AND TO EASE MANUFACTURING	MB	09.11.10
B	REDESIGNED, ADDED PROVISIONS FOR COMPATIBILITY WITH OEM SKIDTUBES/SADDLES; REDEFINED SOME TOLERANCE	MB	09.11.02
A	NEW ISSUE	MB	09.10.22

DESIGN		DART AEROSPACE LTD HAWKESBURY, ONTARIO, CANADA	
DRAWN			
CHECKED	FJS	DRAWING NO. D4010	REV. C SHEET 1 OF 3
MFG. APPR.			
APPROVED		TITLE BEARPAW (407)	SCALE NTS
DE APPR.			
DATE	09.11.10		

COPYRIGHT © 2009 BY DART AEROSPACE LTD
THIS DOCUMENT IS PRIVATE AND CONFIDENTIAL AND IS SUPPLIED ON THE EXPRESS CONDITION THAT IT IS NOT TO BE USED FOR ANY PURPOSE OR COPIED OR COMMUNICATED TO ANY OTHER PERSON WITHOUT WRITTEN PERMISSION FROM DART AEROSPACE LTD.

Dart Aerospace Ltd

W/O:		WORK ORDER CHANGES					
DATE	STEP	PROCEDURE CHANGE	By	Date	Qty	Approval Chief Eng / Prod Mgr	Approval QC Inspector

Part No: _____ **PAR #:** _____ **Fault Category:** _____ **NCR:** Yes No **DQA:** _____ **Date:** _____

Resolution: _____ **Disposition:** _____ **QA: N/C Closed:** _____ **Date:** _____

NCR:		WORK ORDER NON-CONFORMANCE (NCR)						
DATE	STEP	Description of NC Section A	Corrective Action Section B			Verification Section C	Approval Chief Eng	Approval QC Inspector
			Initial Chief Eng	Action Description Chief Eng	Sign & Date			

NOTE: Date & initial all entries

H:\FORMS\Quality Assurance\approved QA\NCRWO RevE

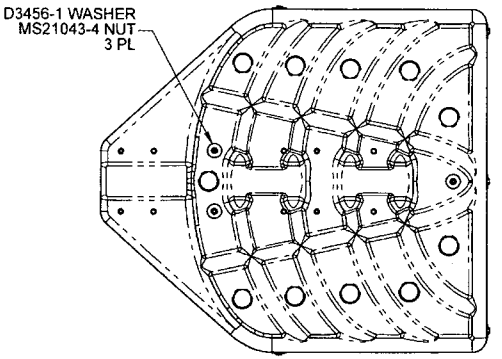

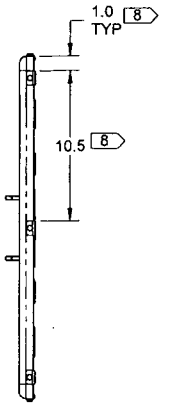

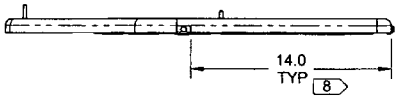

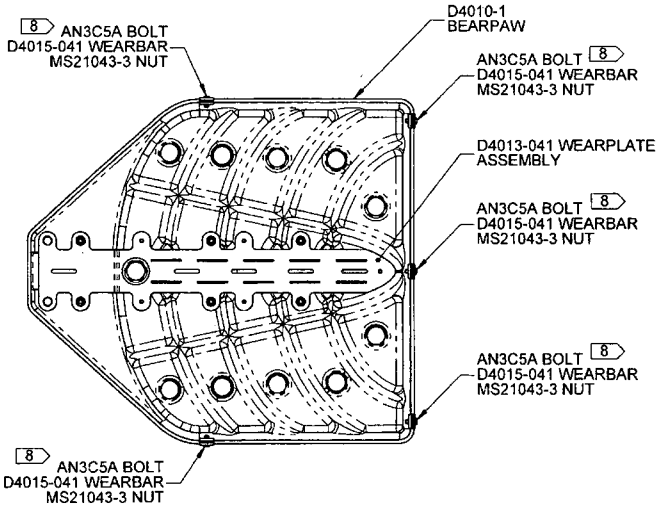

D4010-041 BEARPAW ASSEMBLY (407)

ITEM	QTY -041	P/N	DESCRIPTION
1	X	**D4010-041**	**BEARPAW ASSEMBLY (407)**
3	3	D3456-1	WASHER
4	1	D4010-1	BEARPAW
5	1	D4013-041	WEARPLATE ASSEMBLY
6	5	D4015-041	WEARBAR
21	5	AN3C5A	BOLT
22	5	MS21043-3	NUT
23	3	MS21043-4	NUT

ilo 58337

RELEASED 2009-11-24

D4010-041 NOTES:
1) MATERIAL: N/A
2) FINISH: N/A
3) TOLERANCES: PER DART QSI 018 UNLESS OTHERWISE NOTED
4) UNITS: INCHES UNLESS OTHERWISE NOTED
5) BREAK SHARP EDGES: 0.005 TO 0.010 MAX
6) IDENTIFICATION: NONE
7) WEIGHT: 9.41 lbs
8) LOCATE D4015-041 (ITEM 5) AS SHOWN AND TRANSFER DRILL ∅0.191"HOLE FROM D4015-041 TO D4010-1 BEARPAW AND FASTEN USING PRESCRIBED HARDWARE.
9) TORQUE: AN3 NUTS = 15-20 in-lb
AN4 NUTS = 50-70 in-lb

DESIGN		**DART AEROSPACE LTD** HAWKESBURY, ONTARIO, CANADA
DRAWN		
CHECKED		DRAWING NO. D4010 — REV. C — SHEET 2 OF 3
MFG. APPR.		
APPROVED		TITLE BEARPAW (407) — SCALE NTS
DE APPR.		
DATE 09.11.10		

COPYRIGHT © 2009 BY DART AEROSPACE LTD
THIS DOCUMENT IS PRIVATE AND CONFIDENTIAL AND IS SUPPLIED ON THE EXPRESS CONDITION THAT IT IS NOT TO BE USED FOR ANY PURPOSE OR COPIED OR COMMUNICATED TO ANY OTHER PERSON WITHOUT WRITTEN PERMISSION FROM DART AEROSPACE LTD

Dart Aerospace Ltd

W/O:		WORK ORDER CHANGES					
DATE	STEP	PROCEDURE CHANGE	By	Date	Qty	Approval Chief Eng / Prod Mgr	Approval QC Inspector

Part No: _____ PAR #: _____ Fault Category: _____ NCR: Yes No DQA: _____ Date: _____

Resolution: _____ Disposition: _____ QA: N/C Closed: _____ Date: _____

NCR:		WORK ORDER NON-CONFORMANCE (NCR)						
DATE	STEP	Description of NC Section A	Corrective Action Section B			Verification Section C	Approval Chief Eng	Approval QC Inspector
			Initial Chief Eng	Action Description Chief Eng	Sign & Date			

NOTE: Date & initial all entries

H:\FORMS\Quality Assurance\approved QA\NCRWO RevE

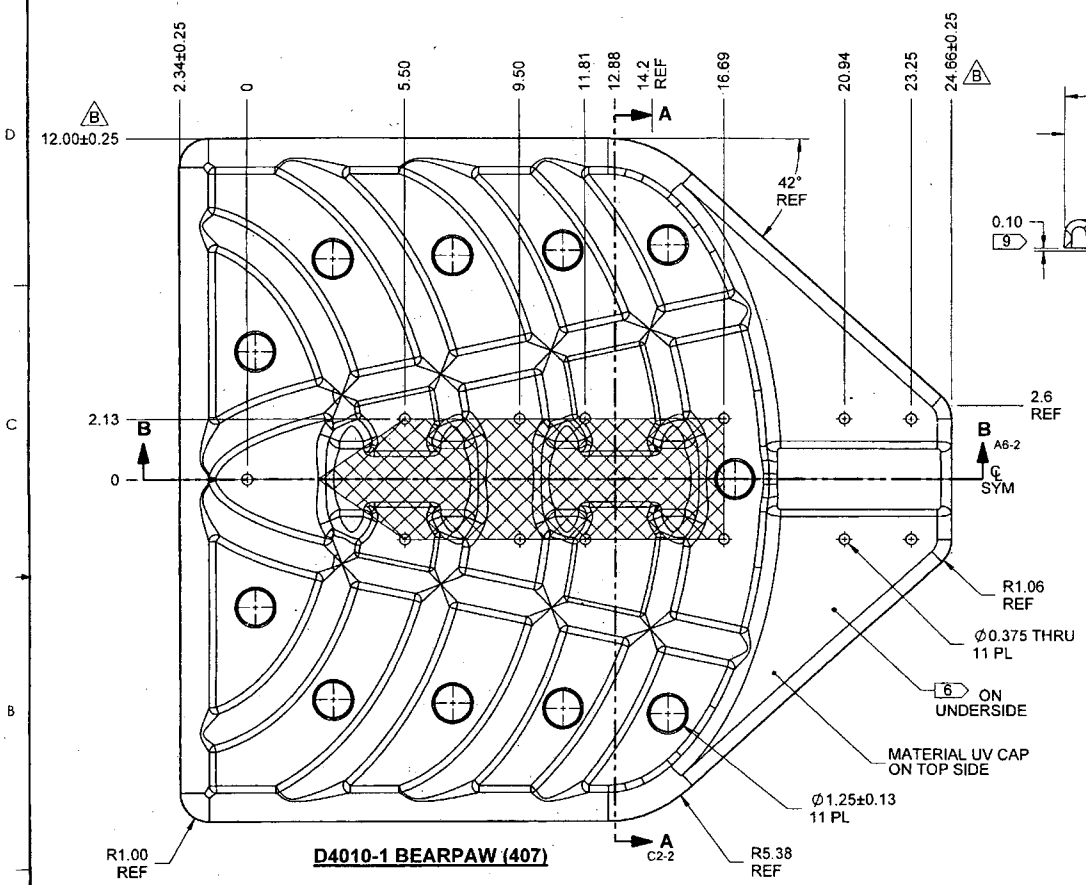

D4010-1 BEARPAW (407)

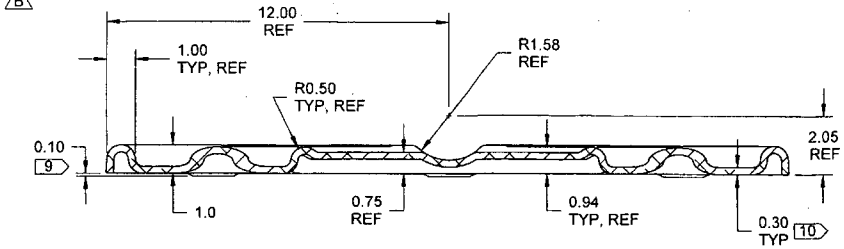

SECTION A-A B6-2

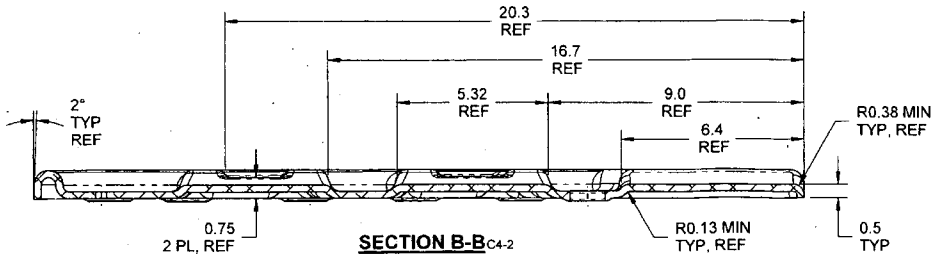

SECTION B-B C4-2

WO 58837

RELEASED 2009-11-24

D4010-1 NOTES:
1) MATERIAL: ALEXTRA ET SHEET, 0.300 THICK
REF. DART SPEC. M-ALXTRAB.300
2) FINISH: NONE
3) TOLERANCES: PER DART QSI 018 UNLESS OTHERWISE NOTED
4) UNITS: INCHES UNLESS OTHERWISE NOTED
5) BREAK SHARP EDGES: 0.005 TO 0.010 MAX
6) IDENTIFICATION: IDENTIFY WITH DART P/N "D4010-1" USING VIBRATING STYLUS
7) WEIGHT: 7.35 lbs
8) THERMOFORMING: PER DT9540 AND QSI 022
9) ACCEPTABLE THICKNESS BOSS AROUND ∅1.25 HOLES
10) MINIMUM THICKNESSES: IN SHADED AREA = 0.210
OUTSIDE SHADED AREA = 0.175

DESIGN		**DART AEROSPACE LTD** HAWKESBURY, ONTARIO, CANADA
DRAWN		
CHECKED	AJS	DRAWING NO. D4010 — REV. C — SHEET 3 OF 3
MFG. APPR.		
APPROVED		TITLE: BEARPAW (407) — SCALE: NTS
DE APPR.		
DATE	09.11.10	

COPYRIGHT © 2009 BY DART AEROSPACE LTD
THIS DOCUMENT IS PRIVATE AND CONFIDENTIAL AND IS SUPPLIED ON THE EXPRESS CONDITION THAT IT IS NOT TO BE USED FOR ANY PURPOSE OR COPIED OR COMMUNICATED TO ANY OTHER PERSON WITHOUT WRITTEN PERMISSION FROM DART AEROSPACE LTD.

Dart Aerospace Ltd

W/O:		WORK ORDER CHANGES					
DATE	STEP	PROCEDURE CHANGE	By	Date	Qty	Approval Chief Eng / Prod Mgr	Approval QC Inspector

Part No: _____ PAR #: _____ Fault Category: _____ NCR: Yes No DQA: _____ Date: _____

Resolution: _____ Disposition: _____ QA: N/C Closed: _____ Date: _____

NCR:		WORK ORDER NON-CONFORMANCE (NCR)						
DATE	STEP	Description of NC Section A	Corrective Action Section B			Verification Section C	Approval Chief Eng	Approval QC Inspector
			Initial Chief Eng	Action Description Chief Eng	Sign & Date			

NOTE: Date & initial all entries

H:\FORMS\Quality Assurance\approved QA\NCRWO RevE

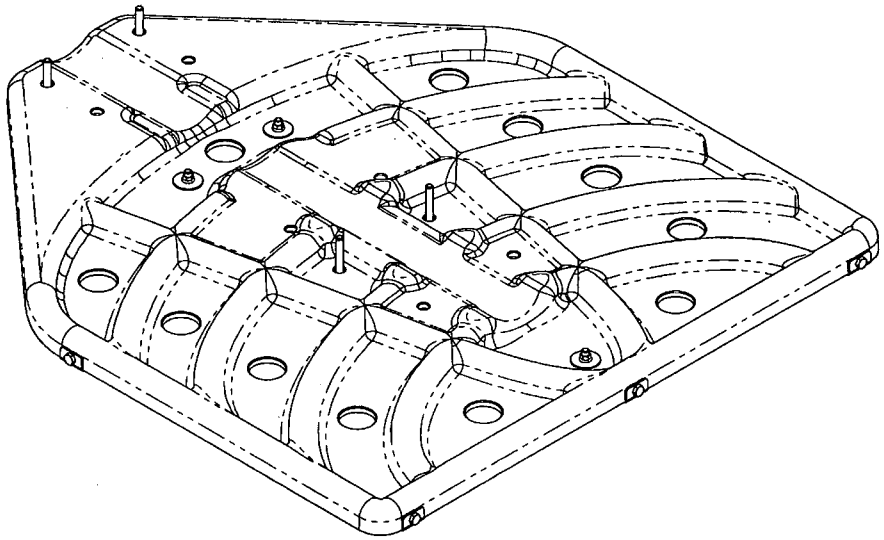

REFERENCE ONLY

RELEASED
2010 -05- 26

D4010-041 BEARPAW ASSEMBLY (407)

REV.	DESCRIPTION	BY	DATE
D	CHANGED NOTE 9 ON SHEET 3 (ZN A3-3); CHANGED Ø0.375 HOLE LOCATIONS FROM HARD CALL OUT TO REF (ZN'S D5-3, D6-3, D7-3); ADDED CHAMFERS TO ALL DRILLED HOLES (ZN B4-3, 2 PL); REMOVED BOSSES ON BOTTOM SURFACE AROUND Ø1.250 HOLES (ZN D4-3 ON PREVIOUS REV'S); PICTORIAL CHANGE ON D4010-1 TO REFLECT MOLD REWORK (RECESSES FOR CLEARANCE OF BOTTOM SADDLE EDGE AND RIVET HEADS ON OEM SKIDTUBES). REASON: SEE PAR#10-020.	MB	10.05.14
C	OPTIMIZED DESIGN BASED ON FUNCTIONALITY AND TO EASE MANUFACTURING	MB	09.11.10
B	REDESIGNED; ADDED PROVISIONS FOR COMPATIBILITY WITH OEM SKIDTUBES/SADDLES; REDEFINED SOME TOLERANCE	MB	09.11.02
A	NEW ISSUE	MB	09.10.22

DESIGN		**DART AEROSPACE LTD** HAWKESBURY, ONTARIO, CANADA
DRAWN		
CHECKED		DRAWING NO. D4010 — REV. D — SHEET 1 OF 3
MFG. APPR.		
APPROVED		TITLE: BEARPAW (407) — SCALE: NTS
DE APPR.		
DATE	10.05.14	

COPYRIGHT © 2009 BY DART AEROSPACE LTD
THIS DOCUMENT IS PRIVATE AND CONFIDENTIAL AND IS SUPPLIED ON THE EXPRESS CONDITION THAT IT IS NOT TO BE USED FOR ANY PURPOSE OR COPIED OR COMMUNICATED TO ANY OTHER PERSON WITHOUT WRITTEN PERMISSION FROM DART AEROSPACE LTD

ITEM	QTY -041	– P/N	DESCRIPTION
1	X	D4010-041	BEARPAW ASSEMBLY (407)
2	3	D3456-1	WASHER
3	1	D4010-1	BEARPAW
4	1	D4013-041	WEARPLATE ASSEMBLY
5	5	D4015-041	WEARBAR
6	5	AN3C5A	BOLT
7	5	MS21043-3	NUT
8	3	MS21043-4	NUT

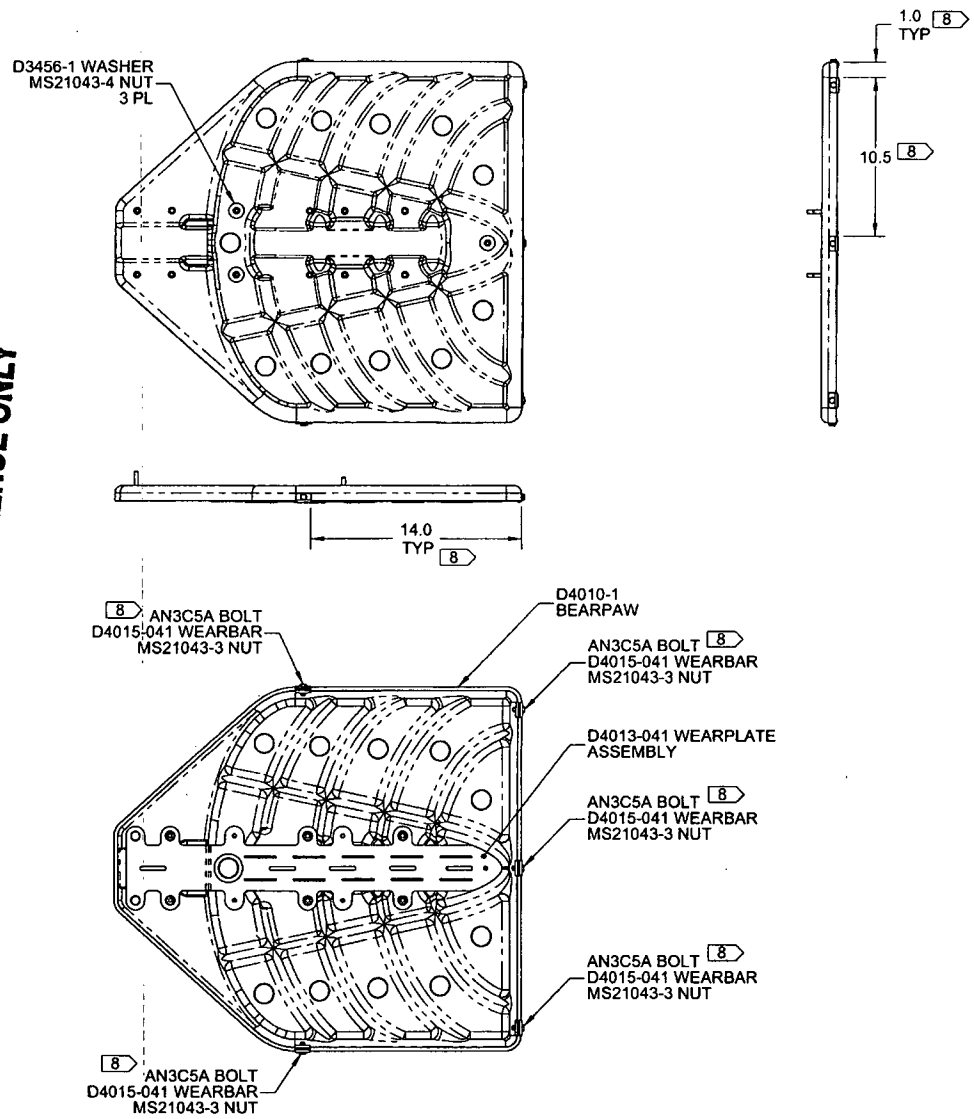

D4010-041 BEARPAW ASSEMBLY (407)

REFERENCE ONLY

RELEASED 2010-05-28

D4010-041 NOTES:
1) MATERIAL: N/A
2) FINISH: N/A
3) TOLERANCES: PER DART QSI 018 UNLESS OTHERWISE NOTED
4) UNITS: INCHES UNLESS OTHERWISE NOTED
5) BREAK SHARP EDGES: 0.005 TO 0.010 MAX
6) IDENTIFICATION: NONE
7) WEIGHT: 9.37 lbs
8) LOCATE D4015-041 (ITEM 5) AS SHOWN AND TRANSFER DRILL ∅0.191 HOLE FROM D4015-041 TO D4010-1 BEARPAW AND FASTEN USING PRESCRIBED HARDWARE.
9) TORQUE: AN3 NUTS = 15-20 in-lb
AN4 NUTS = 50-70 in-lb

DESIGN		DART AEROSPACE LTD HAWKESBURY, ONTARIO, CANADA
DRAWN		
CHECKED		DRAWING NO. D4010 — REV. D — SHEET 2 OF 3
MFG. APPR.		
APPROVED		TITLE: BEARPAW (407) — SCALE: NTS
DE APPR.		
DATE	10.05.14	

COPYRIGHT © 2009 BY DART AEROSPACE LTD
THIS DOCUMENT IS PRIVATE AND CONFIDENTIAL AND IS SUPPLIED ON THE EXPRESS CONDITION THAT IT IS NOT TO BE USED FOR ANY PURPOSE OR COPIED OR COMMUNICATED TO ANY OTHER PERSON WITHOUT WRITTEN PERMISSION FROM DART AEROSPACE LTD

REFERENCE ONLY

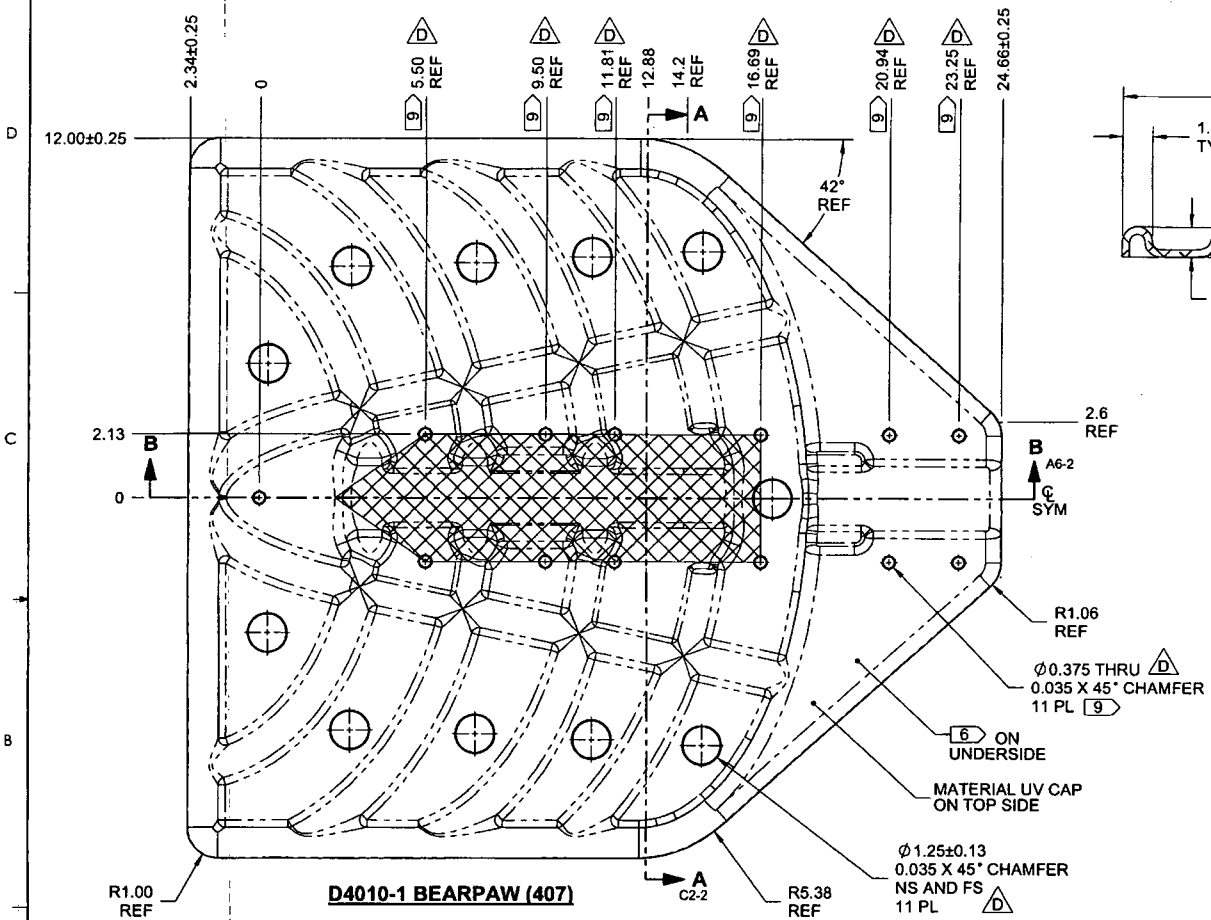

D4010-1 BEARPAW (407)

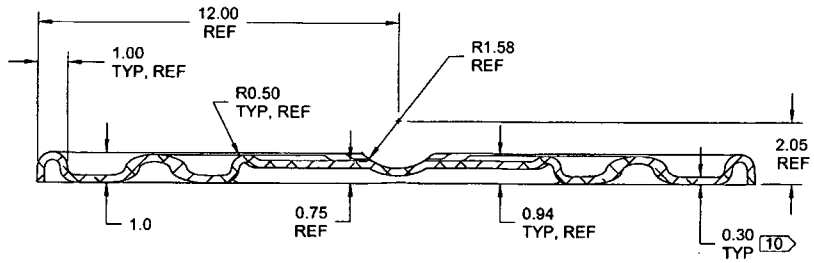

SECTION A-A B6-2

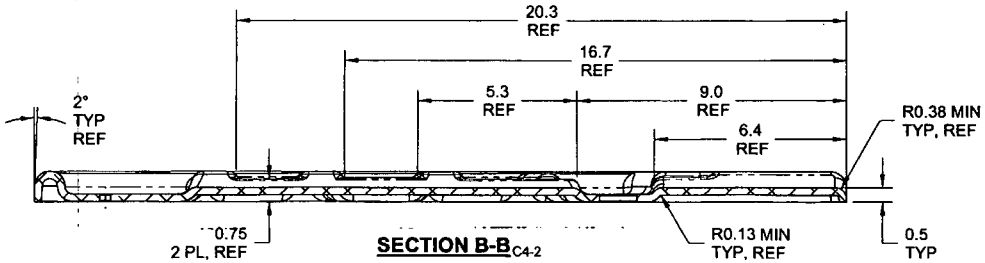

SECTION B-B C4-2

RELEASED 2010-05-26

D4010-1 NOTES:
1) MATERIAL: ALEXTRA ET SHEET, 0.300 THICK
REF. DART SPEC. M-ALXTRAB.300
2) FINISH: NONE
3) TOLERANCES: PER DART QSI 018 UNLESS OTHERWISE NOTED
4) UNITS: INCHES UNLESS OTHERWISE NOTED
5) BREAK SHARP EDGES: 0.005 TO 0.010 MAX
6) IDENTIFICATION: IDENTIFY WITH DART P/N "D4010-1" USING VIBRATING STYLUS
7) WEIGHT: 7.30 lbs
8) THERMOFORMING: PER DT9540 AND QSI 022
D 9) HOLES ARE TRANSFER DRILLED AT ASSEMBLY PER DT9542
10) MINIMUM THICKNESSES: IN SHADED AREA = 0.210
OUTSIDE SHADED AREA = 0.175

DESIGN		**DART AEROSPACE LTD** HAWKESBURY, ONTARIO, CANADA
DRAWN		
CHECKED		DRAWING NO. D4010 — REV. D — SHEET 3 OF 3
MFG. APPR.		
APPROVED		TITLE BEARPAW (407) — SCALE NTS
DE APPR.		
DATE	10.05.14	

COPYRIGHT © 2009 BY DART AEROSPACE LTD
THIS DOCUMENT IS PRIVATE AND CONFIDENTIAL AND IS SUPPLIED ON THE EXPRESS CONDITION THAT IT IS NOT TO BE USED FOR ANY PURPOSE OR COPIED OR COMMUNICATED TO ANY OTHER PERSON WITHOUT WRITTEN PERMISSION FROM DART AEROSPACE LTD.

L Lacelle

From: Marc Bellavance [mbellavance@dartaero.com]
Sent: June 3, 2010 8:26 AM
To: 'L Lacelle'; 'Mike Petsche'
Subject: RE: 407 beapaws

Well, drawing D4010 Rev. D was revised and released on May 26 to include all the changes discussed during our investigation and based on Exova's report.
So really, no Eng sign offs are required. In my opinion, QC can inspect per D4010 Rev. C.

Marc Bellavance
Mechanical Designer/Technical Support
***DART** aerospace Ltd.*
Tel: 613-632-5200 Ext. 240
Fax: 613-632-9311
E-mail: mbellavance@dartaero.com
Web: www.dartaero.com

REFERENCE ONLY

Please consider your environmental responsibility before printing this e-mail
The information contained in this transmission is privileged and confidential and intended only for the use of the individual or entity to whom it is addressed. If you are not the intended recipient, you are hereby notified that any distribution, copying, disclosure or taking of any action in reliance on the contents of this transmission is strictly prohibited and review by any individual other than the intended recipient shall not constitute waiver of privilege. If you have received this transmission in error, please notify me immediately and delete the original transmission.

From: L Lacelle [mailto:llacelle@dartaero.com]
Sent: June 3, 2010 7:27 AM
To: 'Mike Petsche'; 'Marc Bellavance'
Subject: 407 beapaws

We have had some 407 bearpawa D4010-041's made by Daryl some time ago that are still sitting near the pkging area waiting for engineering sign off...who can take care of this for me?

Thank You,
Linda Lacelle
Production Manager
Dart Aerospace Ltd